English Language & Literature Teaching, Vol. 19, No. 3 Fall 2013

The Implication of Minimalist Program on Raising-to-subject Constructions

Mun-Koo Kang*
(Kongju National University)
Yong –Myeong Kim**
(Korea Institute for Curriculum and Instruction)

Kang, Mun-Koo & Kim, Yong–Myeong. (2013). The implication of minimalist program on raising-to-subject constructions. *English Language & Literature Teaching*, *19*(3), 125-135.

According to school grammar, extraposed *that* clause subjects introduced by anticipatory *it* can move up to the subjects of the main clause as in long-distance passivizaion. This phenomenon is understood that the two clauses originate from a single deep syntactic structure which carry the same information. However, generative grammar provides us with some evidence which illustrates that the two sentences are completely distinct constructions with the rationales of the distinction between CP vs TP and PIC (Phase Impenetrability Condition). This article reports the arguments from the two grammars in a complementary way and concludes that the two constructions should be taught as individual syntactic structures.

[raising-to-subject/Phase Impenetrability Condition/ long-distance passivization]

I. INTRODUCTION

Raising-to-subject constructions are one of the raising structures in which an argument of a complement clause is raised into the subject position of the matrix clause. Long-distance passivization is a good case in point. This refers to passive structures which involve moving an argument out of lower a clause into the subject position in a higher clause (Radford, 2004). From a traditional grammar point of view, Greenbaum and Quirk (1997) introduces this construction as in (2) from anticipatory *it* clause as in (1).

---

* First author
** Corresponding author

교보문고 KYOBO Book Centre

(1) It is said that *he* is a coward.
(2) *He* is said to be a coward.

The subject *he* in the extraposed clause in (1) is fronted into the subject position in the matrix clause in (2) and this distributional feature is displayed in other verbal constructions such as *be sure, be certain, seem, appear, be known*, etc. This has been taught in Korean secondary schools and students understand that (1) and (2) carry the same meaning which share the same deep structure.

However, does (2) really come from (1) in terms of the syntactic structure even though they convey the same sense? This paper is directed at investigating the syntactic differences between the two constructions from a Minimalist point of view according to Chomsky (1998, 1999, 2001, 2005). His theories are categorized into theoretical grammar, which seeks to discover the abstract rules and principles underlying the structures contrary to school grammar, which is designed to teach basic and often simplified grammatical patterns as mentioned in Aarts (2011). Analyzing the two principles will enable us to reach an educational implication on this topic. In order to discuss the matter from a complementary point of view, in Ⅱ-1, some fundamental concepts of Minimalism are reported for this issue. In Ⅱ-2, the process of long-distance passivization of 'be said to be …' , which is a case of raising-to-subject raising constructions, is discussed based on Minimalist Program. In Ⅱ-3, some evidence of dispute is provided against the traditional idea that (2) derives from (1). Lastly, this article suggests an educational implication from this argument.

II. LITERATURE REVIEW

1. Some Fundamental Concepts of Minimalist Theory

Generative grammarians seek to find the cognitively simple and general innate linguistic rules which children acquire through their early developmental stage. Since this idea was introduced by Noam Chomsky in the 1950s, there have been modifications under the names of Transformational Generative Grammar (Standard Theory, Extended Standard Theory, Revised Extended Standard Theory), Government and Binding Theory and Minimalist Theory. The theories before Chomsky (1998) are used as classics of Minimalist Program(MP) and in this article it refers to Chomsky (1998, 1999, 2001, 2005). In these theories, Chomsky gives up DS(deep structure) and SS(surface structure) and minimize the

교보문고 KYOBO Book Centre

effects of syntactic structure with PF(sound) and LF(meaning) left for Full Interpretation[1] based on principles of economy.

Chomsky (2001) argues that the basic sentence structure is framed as in (3).

(3) S=[XP [(EA) H YP]]

In this structure EA(external argument) is optional when H is a verb. According to him, there two types of sentences: strong phase and weak phase. Strong phases are symbolized as 'v*P' constructions, which have the subject argument in the position of EA and this moves up to XP. Transitive verb and unergative verb constructions fall into this category as in (4). On the other hand, weak phases represent 'vP' constructions, which own raising verbs, unaccusative verbs and passive structures as in (5). In this structure, the subject moves from YP to XP without the subject deriving from EA[2].

(4) a. John sleeps. (unergative)
b. John reads a book. (transitive)
(5) a. John was loved by everyone. (passive)
b. John seemed to be happy. (raising)
c. There arrived three men. (unaccusative)

Then what causes this movement? Chomsky (1998, 1999) claims that it occurs due to deletion of uninterpretable features, which refer to Φ-features, EPP-features and case features (Choe, 2001)[3]. They are eliminated through the operation between probe and goal. Probe is the functional category (T, v) in a phase which has uninterpretable features such as unvalued tense and number. And Goal is the nominal category (D, N) which carries uninterpretable case feature. In order to accomplish the deletion of uninterpretable features, probe must contain its goal within a c-commanded domain (Agree). Once Agree happens in a phase, the uninterpretable features of probe and goal are valued and deleted.

Chomsky (1999: 7) provides us with the details of Probe-Goal operation as follows. If we have the sentence 'John was loved by everyone', which is one of weak phase structures,

---

[1] This is one of the principles of MP, which explains that there must not be superfluous elements in the representation of sentence structure: each element must play a role and must be interpreted (Crystal, 2008).

[2] In both phases, the subject originates within VP, which is called VP Internal Hypothesis.

[3] - Φ-feature: gender, number, person agreement
- EPP(Extended Projection Principle)-feature: Every T constituent must be extended into a TP projection which has a specifier. The position of specifier must be filled with subject.

TP [Spec [T' [T [VP]]]]

교보문고 KYOBO Book Centre

the tree diagram is formed as in Figure 1. The noun *John* is the thematic complement of the verb *admired* and merges with PP to form V' and VP. Here we see the empty Spec of VP, which is the typical feature of weak phases. Now this is merged with the tense auxiliary BE, forming another v'.

FIGURE 1
Weak Phase

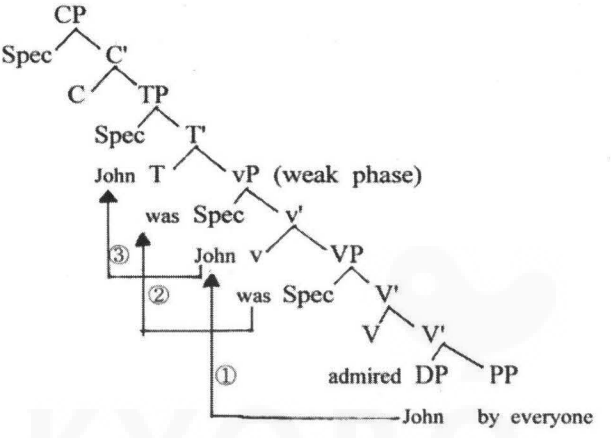

Namely the unvalued Φ-features (unvalued person, unvalued number) on the probe (T-BE) are valued by the valued Φ-features (3rd person, singular number) of the goal (DP-John) and the unvalued case-feature on the goal is valued as subjective case by the probe (T). Therefore all the uninterpretable features of probe and goal are deleted causing *John* to move up to Spec of TP due to EPP feature. This is an example of weak phase.

Now let us take a look at a sentence of strong phase as in Figure 2.

교보문고 KYOBO Book Centre

FIGURE 2

Strong Phase

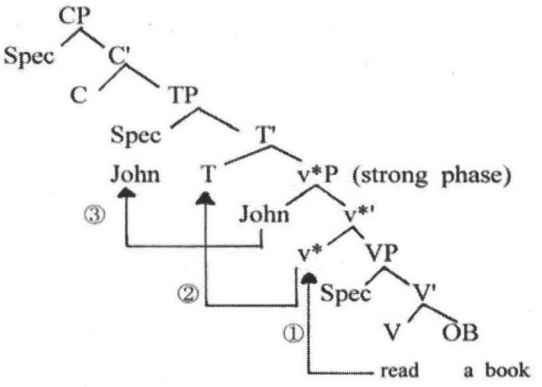

In this sentence the verb *read* is merged with its complement *a book* to form the VP *read a book*. *a book* carries interpretable person and number features and uninterpretable case feature. The resulting VP is then merged with a null transitive verb which carries unvalued and uninterpretable person and number features forming the v' above. The verb probe identifies *a book* as the only active goal which carries an uninterpretable case feature. The goal *a book* values the person and number features of the verb probe. In other words, the transitive verb values the unvalued case feature of *a book* accusative and deletes it. Now the verb trigger raising of the verb *read* from V to v*. Since the verb is transitive, it projects an agent external argument. The relevant argument is *John* and this enters the derivation with interpretable person and number features but an unvalued case feature forming the v*P. Finally EPP feature of null finite T causes Spec of TP to pull *John* to its position because the verb probe have *John* as the only active goal with an unvalued case feature which it c-commands. This results in the noun valuing and deleting the person and number features of the auxiliary and conversely in the auxiliary valuing the case feature of the noun as nominative, and deleting it.

The two derivations expound that the fundamental difference between strong phase and weak phase is whether Spec of vP (weak phase) or v*P(strong phase) is filled with the internal subject from the outset. Then what is phase? Before the idea of phase is covered with, it is needed to discuss CP and TP. As seen in Figure 1 and 2, CP (complementiser phrase) is placed above TP (tense phrase) in tree diagrams. To be concrete, CP is a phrase headed by a complementiser or by an auxiliary or verb occupying the complementiser position. On the other hand, TP refers to phrases headed by a tense-marked auxiliary or an abstract tense morpheme (Radford, 2004). Chomsky (1998) first mentioned 'phase' as follows in (6).

교보문고 KYOBO Book Centre

(6) a. Phases are propositional.
b. Phases are convergent (Chomsky, 1998: 20).

'propositional' originates from propositional logics, which says only the sentences that carry the subject argument in their underlying structure are propositional. Chomsky (2001) later specifies phase as follows.

(7) v*P and CP (but not TP) are propositional constructions (Chomsky, 2001:25).

Based on these assumptions, Chomsky (2001) creates Phase Impenetrability Condition (PIC) as the following.

> The c-command domain of a phase head is impenetrable to an external probe (i.e.A goal which is c-commanded by the head of a phase is impenetrable to any probe c-commanding the phase) (Chomsky, 2001:5).

2. Long-Distance Passivization as Raising-to-subject Construction

Traditional grammar explains that verbs of thinking, feeling and saying can take the complement as the following structure: object + to-infinitive as in (8).

(8) They believe him to be dangerous.

(8) is rather formal and can be changed to be more common as in (9).

(9) They believe that he is dangerous.

However, the passive structure is common and natural, especially in news reports as in (10).

(10) He is believed to be dangerous (Swan, 2005).

This derivation is called long-distance passivisation and Radford (2004: 202-203) illustrates it from an MP point of view as follows.

(11) a. There are believed to have been occurred *several riots*.
b. *Several riots* are believed to have been occurred.
c. [$_{TP}$ There [$_{T}$ are][$_{VP}$ [$_{V}$believed][$_{TP}$ [$_{T}$ to][$_{AUXP}$ [$_{AUX}$ have][$_{VP}$ [$_{V}$ occurred] [$_{QP}$ several riots]]]]]]

교보문고 KYOBO Book Centre

The long-distance passivization as in (11-a) and (11-b) can be explained based on the structure of (11-c). The QP *several riots* merges with the unaccusative verb *occurred* forming the VP *occurred several riots*. The resulting VP merges with the auxiliary *have* to form the AUXP *have occurred several riots*. This merges with the infinitival tense particle *to* resulting in the TP to *have occurred several riots*. The resulting TP merges with the passive verb *believed* to form the VP *believed to have occurred several riots*. This merges with the auxiliary *are* to form *are believed to have occurred several riots*. Since *are* has an EPP feature requiring it to have a specifier causing expletive *there* to be merged in spec-TP. Here there is an another way of satisfying EPP feature of are, which is long-distance passivization because *several riots* is the closest nominal expression which is c-commanded by *are*.

Now returning to (1) and (2), long-distance passivization in expletive *it*[4] will be discussed from a minimalist point of view. Radford (2004: 226-227) argues that expletive *it* constructions are unique for the following reasons. First, contrary to other T constructions, the probe BE(T) of expletive *it* structures does not carry uninterpretable Φ-features.

(12) It is said [that he has taken bribes] and [that he has embezzled company funds].

Seen from (12) the probe *is* does not agree with the two CPs in the number agreement. Second, as we can see the ungrammaticality from (13), *that* clause is caseless because it does not have an unvalued case feature or search for an active goal, where it is assigned accusative case by a transitive preposition *of*.

(13) *There have been reports of *that he has taken bribes*.

Lastly, the probe *is* does not match with the subject of *that* clause- since *is*dose not agree with the *we* in *that* clause in their number agreement as in (14).

(14) It *is* said [$_{CP}$ that [$_{TP}$*we* have taken bribes]].

Thus far the traditional grammar's analysis of *it-that* long-distance passivization was exemplified in (1)-(2), which argue that the two sentences stem from the syntactically interchangeable structure. However, mention of Radford (2004)'s analysis from

[4] Here 'expletive' comes from Government Binding Theory, which includes 'dummy', 'anticipatory' *it*. However in terms of traditional grammar, anticipatory (preparatory, extraposed) *it* is distinguished from expletive (dummy) *it*. For example, Aarts (2011) names this use of *it* anticipatory *it*.

교보문고 KYOBO Book Centre

Minimalist's point of view leads us to consider that implicit in his view is the assumption that long-passivization of *it-that* clause must be treated as utterly disparate constructions. In this and subsequent section, the theoretical rationale of dispute will be supplied in terms of MP.

III. EVIDENCE OF THE DISPUTE AGAINST TRADITIONAL GRAMMAR

1. PIC

In the last part of Ⅱ-1, the principle of PIC was discussed. PIC tells us that once the operation which take place on the CP level have been completed, the TP which is in the domain of the phase head C is sent to the PF and LF. Therefore TP is not accessible in the syntax any more, and hence neither TP nor any constituent of TP can subsequently play a role as a goal for a higher probe in the structure. Now let us talk about how the probe BE in the main clause and the subject *he* in *that*-clause operate in their derivation regarding PIC in Figure 3.

FIGURE 3
BE & HE Operation in PIC

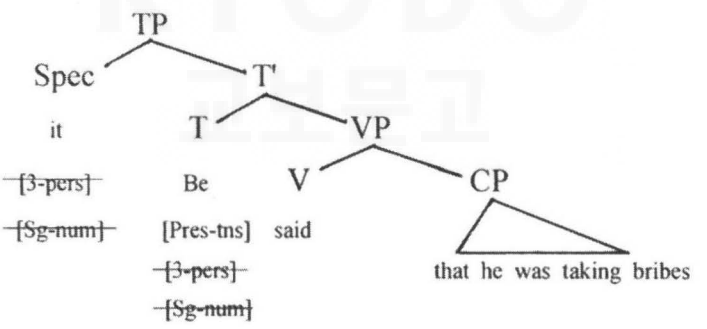

that-clause is a CP, which means it is a phase. The domain of that CP contains the TP *he was taking bribes*. This means that neither this TP nor any of its constituents can serve as a goal for a probe outside CP. Since *is* in TP lies outside the bracketed CP phase and *he* lies inside TP domain, PIC disallows agreement between the *he* and *is* as in Figure 3. In other words, BE cannot agree with *that*-clause because this is inactive and has no Φ-features or case feature; nor can BE agree with *he*, because PIC makes *he* impenetrable to BE. It is because BE cannot agree with CP or with any of its constituents that expletive *it* has to be used in order to satisfy the EPP requirement of T and to value the Φ-features of T.

교보문고 KYOBO Book Centre

2. TP vs CP in passivization

As covered in Ⅱ-1, CP is the maximal projection of C and equivalent to S' in which complementisers are placed. TP refers to a lower layer under CP and it realizes various agreement such as number, tense, etc[5] and the maximal projection of T. Radford (2004: 108-109) argues that only arguments of TP, not CP can be the subjects of passives as displayed in the following ECM (exceptional case-marking) clauses[6] as in (15) and (16).

(15) a. Nobody intended [$_{TP}$*you* to get hurt].
b. *You* weren't intended to get hurt.
(16) a. Nobody intended [$_{CP}$ for *you* to get hurt].
b.**You*weren't intended [for to get hurt].

The verb *intend* can take CP or TP as complement as in (15-a) and (16-a) but when they were passivized, only (15-a) which take TP complement is grammatical as in (15-b) and (16-a) is ungrammatical as in (16-b) since it takes CP complement.

Let us take the following examples.

(17) a. It is said that [$_{CP}$*he* is jealous of his friend].
b. *He* is said to be jealous of his friend.

Traditional grammar suggests that (17-b) is the passivized construction of (17-a), but as dealt with until now, only the subject of TP can be the subject in passive clause. Given Ⅱ-3, a plausible suggestion to make is that (17-a) and (17-b) are syntactically different structures although they contain the same or similar message[7].

---

[5] In earlier versions of X-bar theories, TP was named IP(Inflectional Phrase).
[6] In ECM clauses, which are terms used in generative grammar, the case of objectives are checked by the verb of higher clauses and the thematic role is given by the verb of lower clauses. Chomsky (1999) terms them defective clauses.
[7] According to information structure theory (Aarts, 2011), the two structures convey different messages. In 'It is said that he…', the information of *that*-clause is new information between addressors and addressees depending on the Give-Before-New Principle. On the other hand, 'He is said to…'structure implies the subject *he* was already mentioned between speakers and listeners, which means the person they are talking about is old information and the subject-related complement is new information.

교보문고 KYOBO Book Centre

IV. CONCLUSION

Long-distance passive construction, which is one of raising-to-subject raising structures, have been explored in this article from a Minimalist Theory and traditional grammar point of view. Traditional grammar views them as having the same underlying structure and carrying the same meaning. As is often the case with school settings, the two structures have been taught to share the same deep structure. However, generative grammar analyzes them as different structures. It theorizes Phase Impenetrability Condition and differentiation between CP and TP in order to deal with the two structures. Minimalist analysis is lent plausibility by the fact that arguments of CP cannot be the subject of passive constructions and any elements within a phase cannot move out and be an argument in another phase. This study adopts Minimalist's position to argue that 'it is said that he…'is a kind of set expression and 'He is said to …' is a totally different syntactic structure and students should be educated from this point.

REFERENCES

Aarts, B. (2011). *Oxford Modern English Grammar*. New York: Oxford University Press.

Choe, Sook-Hee. (2001). Expletives and EPP. *English Language & Literature Teaching, 7*(1), 161-178.

Chomsky, N. (1998). *Minimalist Inquiries: The Framework*. MIT Occasional Papers in Linguistics No. 15. MIT.

Chomsky, N. (1999). *Derivation by Phase*. MIT Occasional Papers in Linguistics, No. 18. MIT.

Chomsky, N. (2001). *Beyond Explanatory Adequacy*. MIT Occasional Papers in Linguistics, No. 20. MIT.

Chomsky, N. (2005). *On Phases*. unpublished paper. Mass: MIT.

Crystal, D. (2008). *A Dictionary of Linguistics and Phonetics*. Carlton: Blackwell Publishing.

Greenbaum, S. & Quirk, R. (1997). *A Student's Grammar of the English Language*. London: Longman.

Radford, A. (2004). *English Syntax: An Introduction*. Cambridge: Cambridge University Press.

Swan, M. (2005). *Practical English Usage*. Oxford: Oxford University Press.

교보문고 KYOBO Book Centre

Examples in: English
Applicable Languages: English
Applicable Levels: College/Higher

Kang, Mun-Koo
Dept. of English Education Kongju National University
182, Shinkwan-dong, Gongju-siChungnam, 314-701
Tel: (041) 850-8190
Email: kangmunkoo@hanmail.net

Kim, Yong-Myeong
Division of College Scholastic Ability Test (CSAT),
Korea Institute for Curriculum and Instruction,
#321 Jeongdong Building, 15-5 Jeong-dong, Jung-go, Seoul, Korea, 100-784
Tel: 02-3704-3533
Email: mencius@kice.re.kr

Received in July, 2013
Reviewed in August, 2013
Revised version received in September, 2013

교보문고 KYOBO Book Centre